Andromeda

AD.12.01

Burnished Silver
Quartz White Glass

Lindsey Adelman Studio

212-473-2501

info@lindseyadelman.com

Andromeda

AD.12.01

Lindsey Adelman Studio

Front

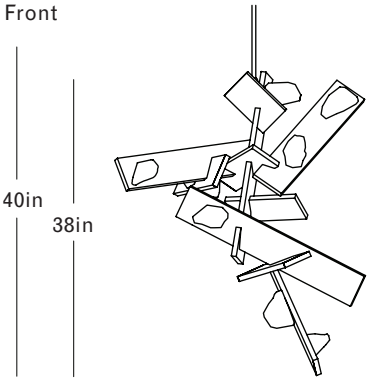

Top

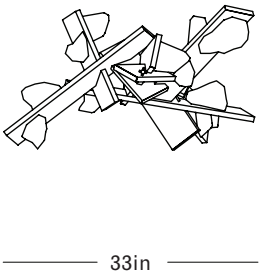

Side

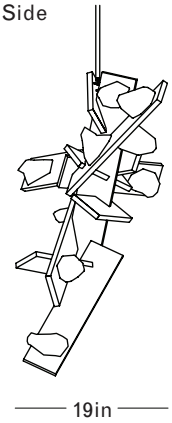

Finish Palette

Burnished Brass

Burnished Silver

Burnished Bronze

Satin Black

Quartz White Glass

Unique stone finishes available by request.

Specifications

DIMENSIONS
Height: 40in / 101cm
Width: 33in / 84cm
Depth: 19in / 48cm
Minimum Drop: 44in / 112cm
Weight: 30lb / 13.5kg*
*Stone finishes may increase weight

SUSPENSION
Ships with 36in or 72in stem, can be cut to length on site

CANOPY
L5in x W5in x H.75in

MATERIALS
Aluminum, mold-blown glass.

BULBS
G4 / 12v / 1.2w / 2700k / dimmable LED, transformer provided
Maximum Fixture Wattage: 14.4w

Inspiration

Inspired by its namesake galaxy, Andromeda feels as if it has erupted into form—luminous, architectural, and charged with motion. Intersecting planes sit in uneasy balance, holding expansion and contraction at once; each piece hovers between stillness and movement, poised between the physical and the sublime.

212-473-2501

info@lindseyadelman.com