Alabaster Hemisphere 5"

ALLIED MAKER

WAC-083

SALES@ALLIEDMAKER.COM

(212) 334-7333

81 FRANKLIN ST. NYC

HANDCRAFTED IN USA

Alabaster Hemisphere 5"

ALLIED MAKER

WAC-083

MATERIALS

Alabaster

MOUNTING HARDWARE DIAGRAM

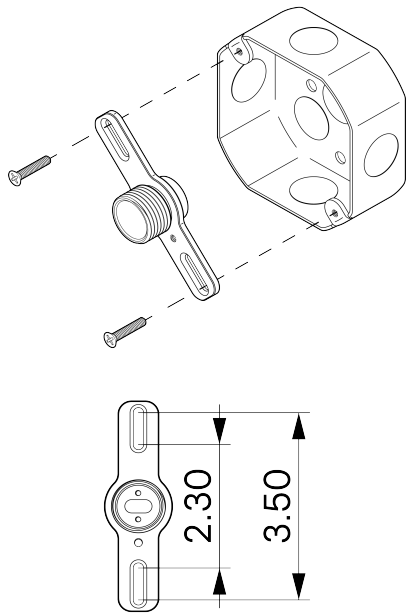

MOUNTING

Universal

WEIGHT

2.75 lb

LAMPING

G8 Bi-Pin Base. Type T Lamps

BULB INCLUDED (120V USA)

Emery Allen 4.5W G8 Bulb

BULB INCLUDED (240V EU)

Emery Allen 4.5W G8 240V Bulb

LAMP QUANTITY

1

BRIGHTNESS

450 Lumens

MAX WATTAGE

6W

DIMMING

LED+

DIMENSIONAL DRAWING

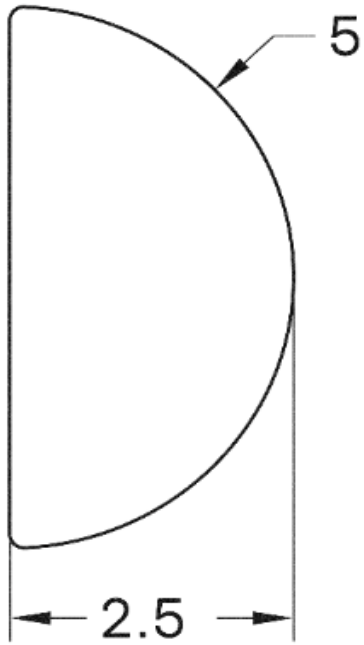

CERTIFICATIONS

ADA Compliant, CE, Damp Locations, UL and cUL Certified

UL CERTIFIED SAFETY US·CA E469387